Reference 10000891 | A3

OC-205
Item 943100

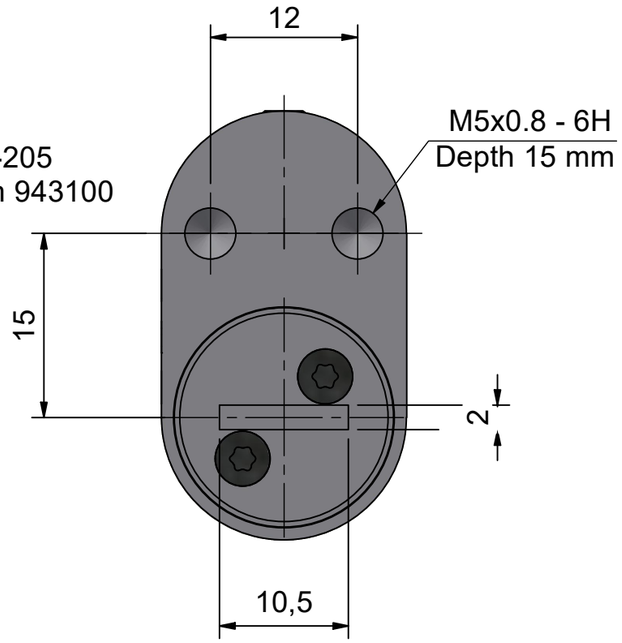

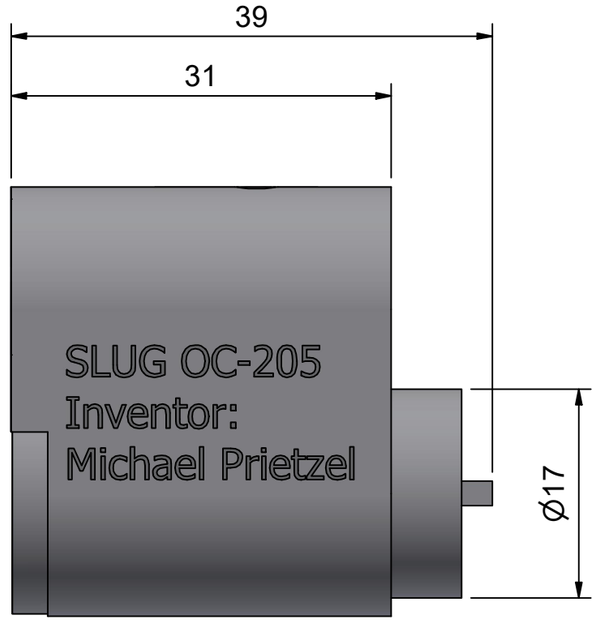

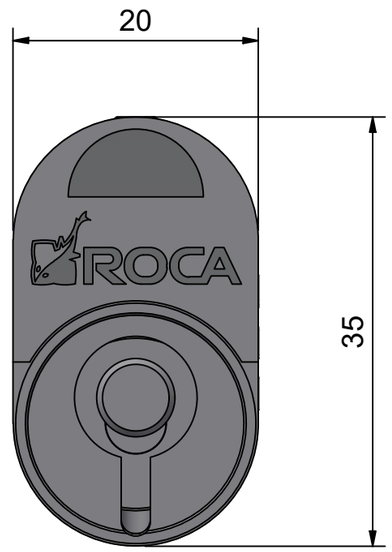

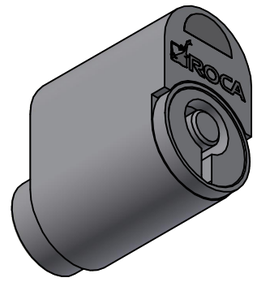

OC-205L
Item 943110

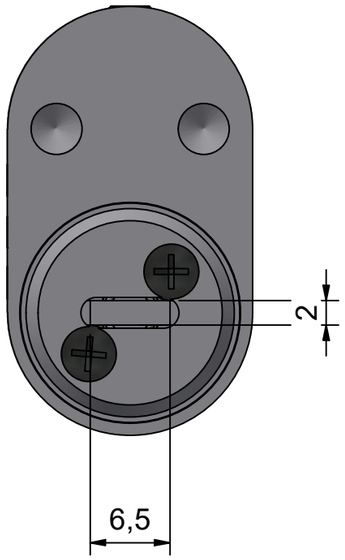

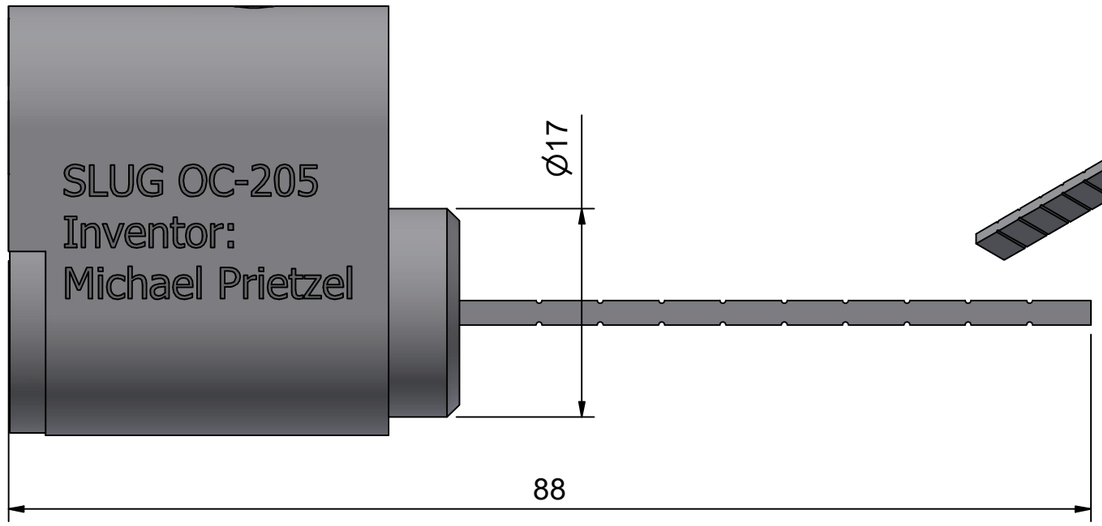

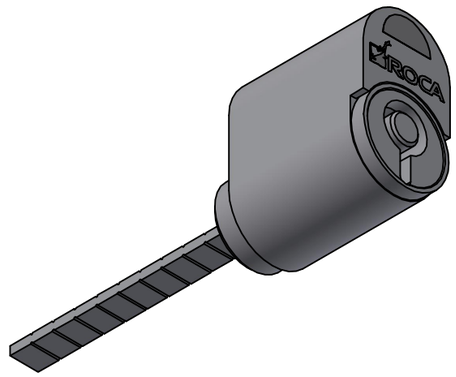

Cylinder for fire key	Date V2 211209/AG
Description **SLUG OC-205 (L)**	Item no. **943100 / 943110**