Reference 939080 | A3

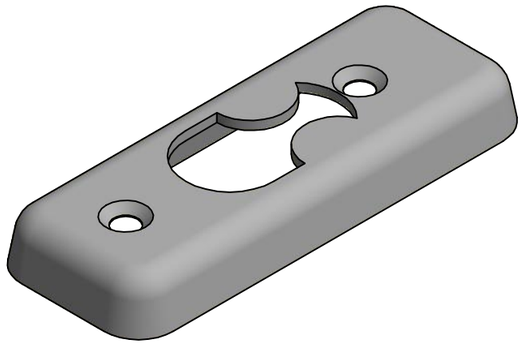

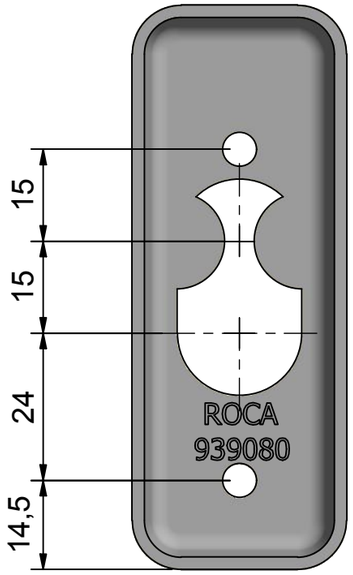

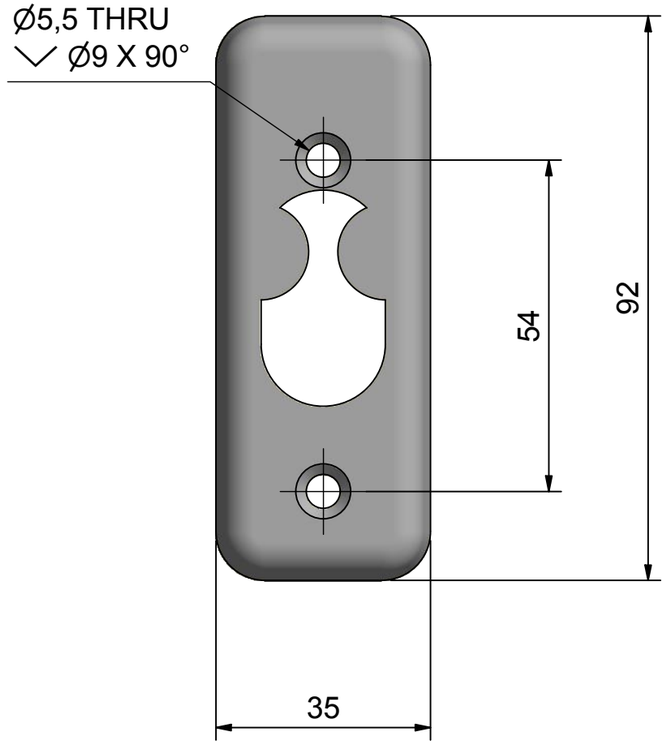

AISI304/Electro polished	Date 191126/HH
Description **Cylinder escutcheon, Narrow**	Item no. **939080**