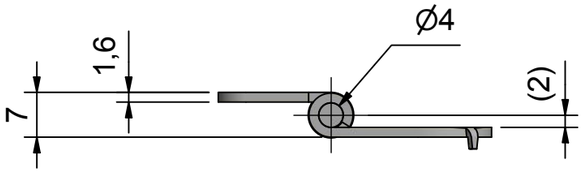

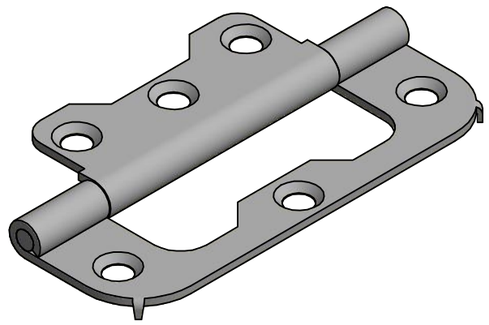

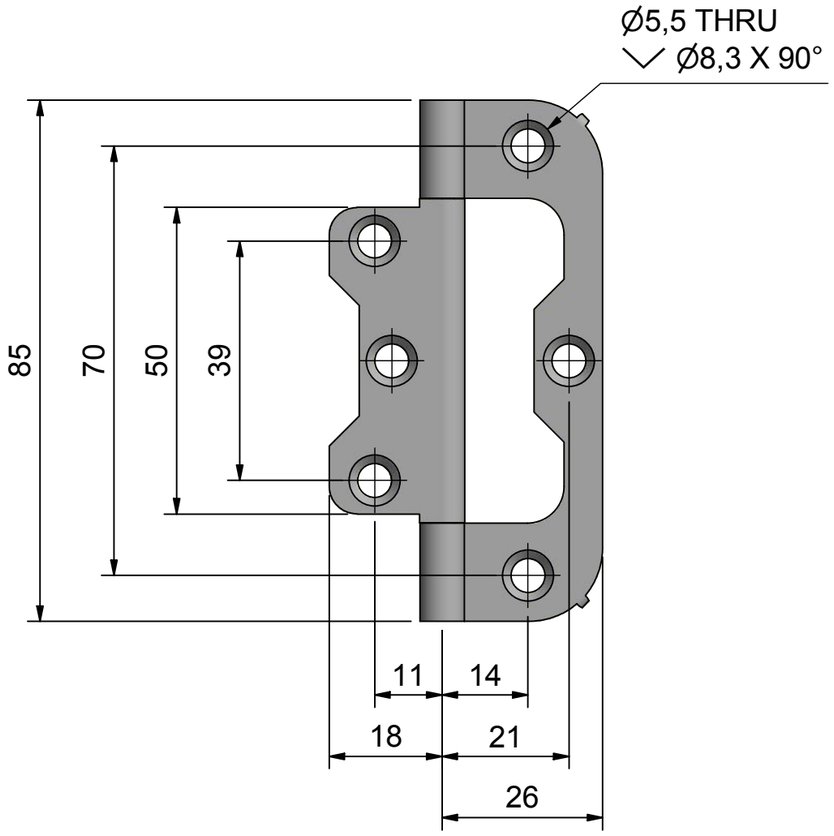

Steel/Zinc plated	Date 191031/HH
Description **Connection hinge with barbs**	Item no. **930060**