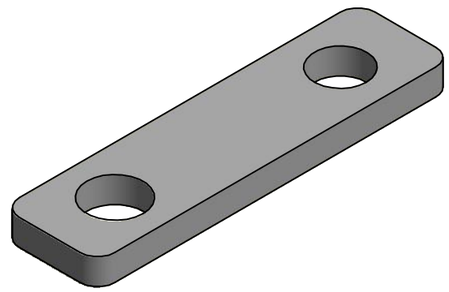

(2 : 1)

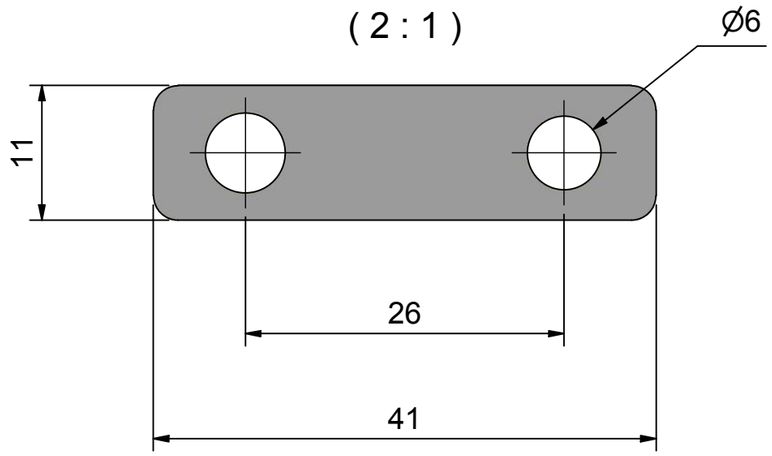

Plastic	Date 191111/HH
Description **Distance plate for SLUG 2010**	Item no. **929213**