Reference 422340 | A3

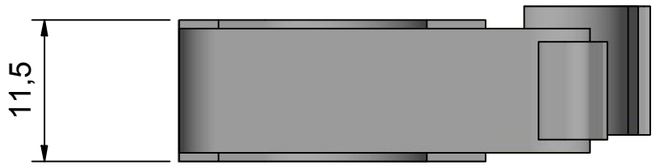

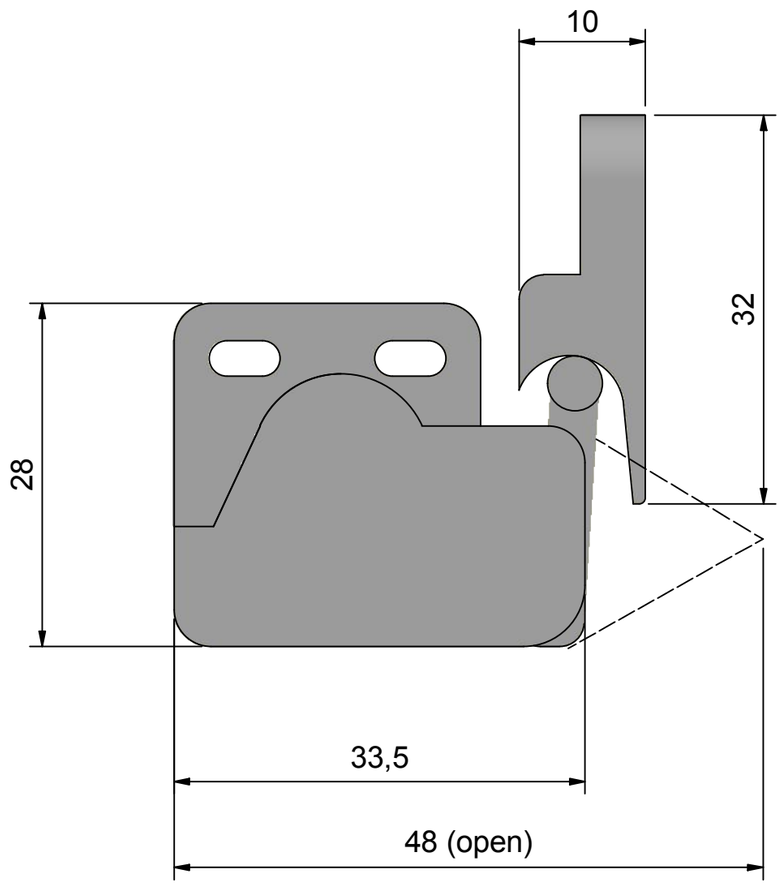

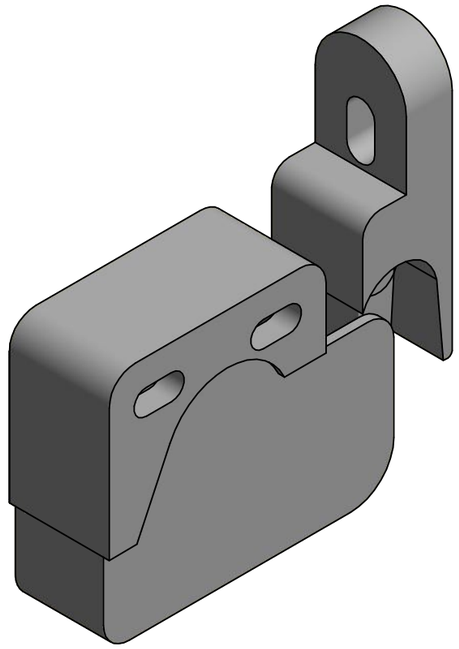

Steel/Polished	Date 191017/HH
Description **Mini latch**	Item no. **422340**