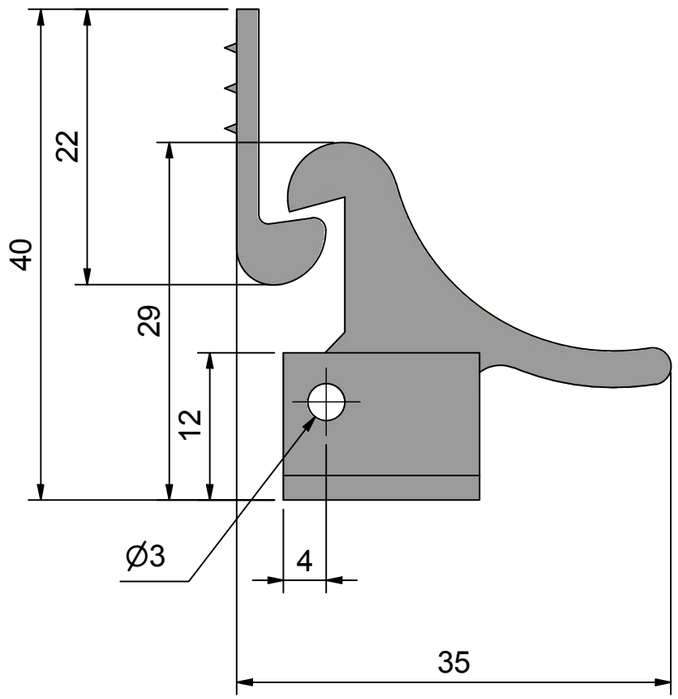

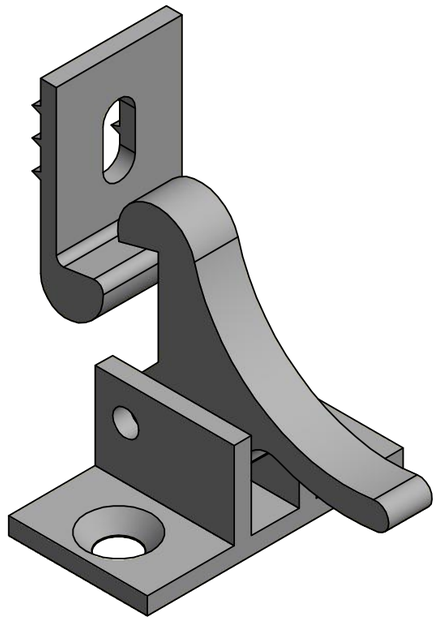

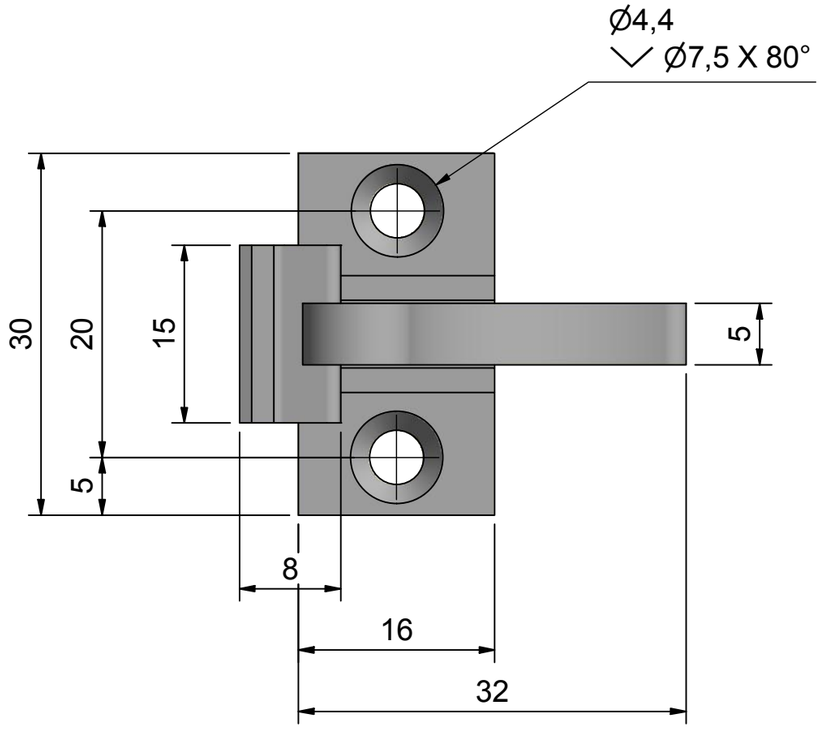

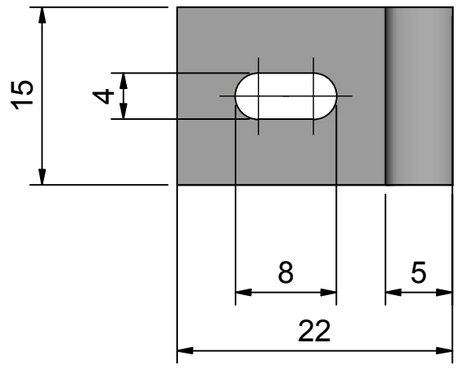

Brass/Polished	Date 190919/HH
Description **Elbow catch**	Item no. **422331**