Referense 421825 | A3

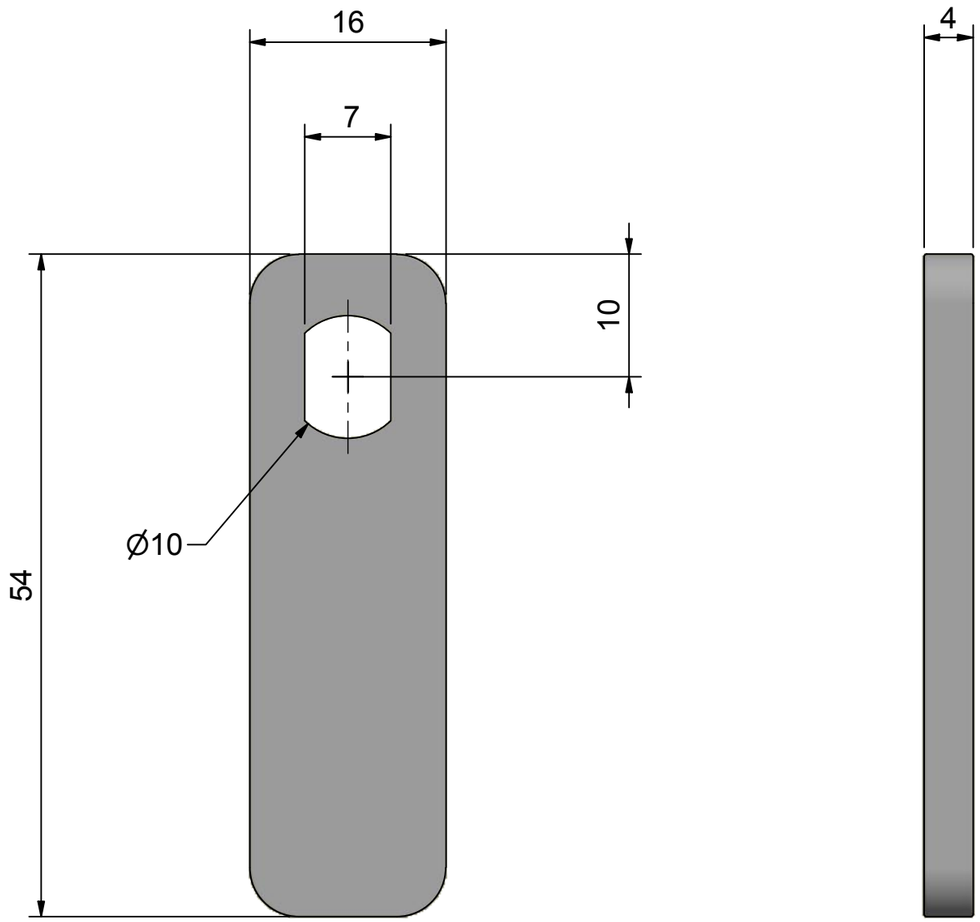

AISI316/Electro polished	Date 190916/HH
Description **Straight cam for thk. 47-70mm**	Item no. **422271**